PVN DC 2I 1O 2MPP SPD1R EVO 11

Weidmüller Interface GmbH & Co. KG
Klingenbergstraße 26
D-32758 Detmold
Germany

www.weidmueller.com

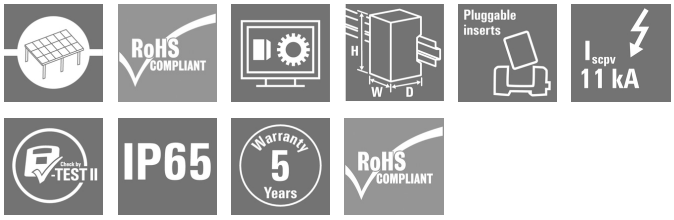

PV Next combiner boxes for inverters with 1 to 12 MPP trackers are used to protect the DC side of a photovoltaic system. The combiner boxes protect the inverter against overvoltages and thus comply with the European Directive CLC/TS 51643-32. In addition, these products offer the possibility to protect the system against reverse currents and the possibility to combine strings to save cables during installation.

General ordering data

Version	Photovoltaics, Combiner Box, 1100 V, 2 MPP's, 2 Inputs / 1 Output per MPP, Surge protection I / II, MC4-Evo 2
Order No.	2866360000
Type	PVN DC 2I 1O 2MPP SPD1R EVO 11
GTIN (EAN)	4064675604044
Qty.	1 pc(s).
Replacement parts	2530600000 2534300000

PVN DC 2I 1O 2MPP SPD1R EVO 11

Weidmüller Interface GmbH & Co. KG
Klingenbergstraße 26
D-32758 Detmold
Germany

www.weidmueller.com

Technical data

Dimensions and weights

Depth	132 mm	Depth (inches)	5.197 inch
Height	236 mm	Height (inches)	9.291 inch
Width	200 mm	Width (inches)	7.874 inch
Net weight	2,100 g		

Temperatures

Ambient temperature	-40 °C...+50 °C	Humidity	5...95 %, no condensation

Approvals and norms

Approvals	EN 61439-2, IEC 61439-2

Guarantee

Time interval	5 years

Inputs

Amount of maximum power points (MPP)	2		
DC Input + & -	Wire connection	Type of connection	Stäubli MC4-Evo 2 connector
		Wire cross-section, min.	2.5 mm²
		Wire cross-section, max.	6 mm²
	Cable entry	Number of cable entries	4
Functional earth connector	Cable entry	Number of cable entries	1
	Wire connection	Type of connection	Screw connection
		Flexible, max. H05(07) V-K	25 mm²
		w. wire end ferrule, DIN 46228 pt 1, max.	16 mm²
Fuse type	Neither fuse cartridge nor holder		
Max. number of DC inputs	per Maximum Power Point 2 inputs connected in parallel		
Surge protection auxiliary contact	Cable entry	Number of cable entries	1
	Wire connection	Type of connection	Tension clamp connection with actuator
		Flexible, max. H05(07) V-K	1.5 mm²
		w. wire end ferrule, DIN 46228 pt 1, max.	1.5 mm²

Outputs

DC Output + & -	Wire connection	Type of connection	Stäubli MC4-Evo 2 connector
		Compatible cable crossection	TÜV 2 Pfg1169/08.07
		Wire cross-section, min.	2.5 mm²
		Wire cross-section, max.	6 mm²

PVN DC 2I 1O 2MPP SPD1R EVO 11

Weidmüller Interface GmbH & Co. KG
Klingenbergstraße 26
D-32758 Detmold
Germany

www.weidmueller.com

Technical data

Max. number of DC outputs	per Maximum Power Point 1 output

Classifications

ETIM 6.0	EC002928	ETIM 7.0	EC002928
ETIM 8.0	EC003857	ETIM 9.0	EC003857
ECLASS 9.0	22-57-92-03	ECLASS 9.1	22-57-02-90
ECLASS 10.0	22-57-02-90	ECLASS 11.0	22-57-02-92
ECLASS 12.0	22-57-02-92	ECLASS 13.0	22-57-02-92
ECLASS 14.0	22-57-02-92		

Tender specification sheets

Long specification

Combiner box for inverters with 2 MPP tracker, suitable for protecting the DC side of a photovoltaic system according to EN 51543-32.

MPP1:
2 inputs, connection via MC4-Evo 2 connector, compatible with cable type TÜV 2 Pfg1169/08.07 / EN 50618:2063
1 output, connection via MC4-Evo 2 connector, compatible with cable type TÜV 2 Pfg1169/08.07 / EN 50618:2063
MPP2:
identical to MPP1

Max. string voltage Uoc: 1100V
1 class/type I + II combined arrester with signal contact
Connection of the signal contact via cable glands (8-12mmØ) max. conductor cross-section: 1.5mm²
Connection of the functional earth via cable glands (8-12mmØ) Conductor cross-section: 16-25mm²
Protection class: IP65
All built into a glas fibre reinforced polyester housing. Dimensions HxWxD: 236x200x132 mm

Approval according to low voltage switchgear and controlgear IEC 61439-1:2011 and EN 61439-2:2011

PVN DC 2I 1O 2MPP SPD1R EVO 11

Weidmüller Interface GmbH & Co. KG
Klingenbergstraße 26
D-32758 Detmold
Germany

www.weidmueller.com

Technical data

Environmental Product Compliance

RoHS Compliance Status	Compliant with exemption
RoHS Exemption (if applicable/known)	6c
REACH SVHC	Lead 7439-92-1
SCIP	bdab5698-6a20-4370-8e28-8810d882d01a

Important note

Product information	The SCIP number was assigned due to a lead content of more than 0.1 % of the net weight. Safe use instruction according to ECHA: The identification of the hazardous substance is sufficient to allow safe use of the article throughout its life cycle, including the service life, disassembly and waste/recycling phase

Approvals

Approvals	CE
ROHS	Conform

Downloads

Approval/Certificate/Document of Conformity	Declaration of Conformity for PV Next Mini 2
Engineering Data	CAD data – STEP
Technical Documentation	Customer drawing CAD data – Schematic Diagram for PV Next 2x 2In 1Out Boxes 2932700000_00_03-2023_DRILL-TEMP_PV-Next_20-20
User Documentation	Manual PV Next String Combiner Box MANUAL PV NEXT IT/ES/FR Instruction leaflet PV NEXT MINI Manual PV Next Mini
White paper	Fact Sheet DE PV CB Wie man Gebäude gegen Blitzeinschläge schützt Fact Sheet DE PV Wie man die Lebensdauer eines GAK verlängert Fact Sheet DE PV CB Wann Sicherungen zu installieren sind Fact Sheet DE CB PV NEXT Fact Sheet EN PV CB When DC fuses are mandatory to install Fact Sheet EN CB PV NEXT Fact Sheet EN PV How to protect buildings against lightning strikes Fact Sheet EN PV How to extend the life time of a Combiner Box Fact Sheet DE CB PV Strings kombinieren Fact Sheet EN CB Combining PV strings Fact Sheet EN PV Combiner Box earthing Fact Sheet DE PV Combiner Box Erdung
Catalogues	Catalogues in PDF-format

PVN DC 2I 1O 2MPP SPD1R EVO 11

Weidmüller Interface GmbH & Co. KG
Klingenbergstraße 26
D-32758 Detmold
Germany

www.weidmueller.com

Drawings

PCB design

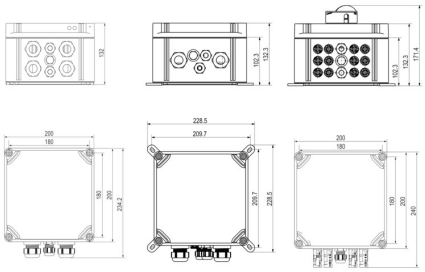

PVN DC 2I 1O 2MPP SPD1R EVO 11

Weidmüller Interface GmbH & Co. KG
Klingenbergstraße 26
D-32758 Detmold
Germany

www.weidmueller.com

Replacement parts

Spare Arrester

General ordering data

Type	VPU PV I+II 0 1000	Version
Order No.	2530600000	Surge voltage arrester, Low voltage, Accessories, Surge protection I / II, Spare arrester
GTIN (EAN)	4050118540819	
Qty.	9 pc(s).	
Type	VPU PV I+II 0M 1000	Version
Order No.	2534300000	Surge voltage arrester, Low voltage, Surge protection I / II, Spare arrester
GTIN (EAN)	4050118545906	
Qty.	9 pc(s).	

PVN DC 2I 1O 2MPP SPD1R EVO 11

Weidmüller Interface GmbH & Co. KG
Klingenbergstraße 26
D-32758 Detmold
Germany

www.weidmueller.com

Accessories

Cutting tools

Cutting tools for conductors up to 8 mm, 12 mm, 14 mm and 22 mm outside diameter. The special blade geometry allows pinch-free cutting of copper and aluminium conductors with minimum physical effort. The cutting tools (KT 8 to KT 22) also come with VDE and GS-tested protective insulation up to 1,000 V in accordance with EN/IEC 60900.

General ordering data

Type	KT 14	Version
Order No.	1157820000	Cutting tools, Cutting tool for one-hand operation
GTIN (EAN)	4032248945344	
Qty.	1 pc(s).	

UV-resistant cable ties

UV-resistant polyamide 6.6 ensures long durability of our special cable ties even with strong UV radiation. Ideal for continuous outdoor use.

General ordering data

Type	CB-UVR 290/4,5 BK	Version
Order No.	2659350000	Cable ties, 4.5 x 290 mm, Polyamide 66, 220 N
GTIN (EAN)	4050118682816	
Qty.	100 pc(s).	

PVN DC 2I 1O 2MPP SPD1R EVO 11

Weidmüller Interface GmbH & Co. KG
Klingenbergstraße 26
D-32758 Detmold
Germany

www.weidmueller.com

Accessories

Slotted screwdriver

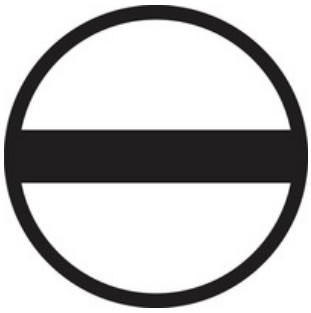

VDE insulated slot-head screwdriver, SDI DIN 7437, ISO 2380/2, drive output acc. to DIN 5264, ISO 2380/1. SoftFinish grip

General ordering data

Type	SDIS 1.0X5.5X125	Version
Order No.	2749850000	Screwdriver, Blade width (B): 5.5 mm, Blade length: 125 mm, Blade thickness (A): 1 mm
GTIN (EAN)	4050118897050	
Qty.	1 pc(s).	
Type	SDIS 0.6X3.5X100	Version
Order No.	2749810000	Screwdriver, Blade width (B): 3.5 mm, Blade length: 100 mm, Blade thickness (A): 0.6 mm
GTIN (EAN)	4050118897012	
Qty.	1 pc(s).	

Y-Connector Cables

The Y or X cable is used to connect three or four elements of a PV system, such as the connection between PV panels, inverters and surge protection boxes. The cables are available in different connection variants.

General ordering data

Type	PVHYM-M-XXXX6W+15	Version
Order No.	2877850000	Photovoltaics, Y-Connector Cable, 1x WM4 C Female, 2x MC4 Male, 6mm², 1500 V
GTIN (EAN)	4064675666417	
Qty.	1 pc(s).	
Type	PVHYM+M+XXXX6W-15	Version
Order No.	2877860000	Photovoltaics, Y-Connector Cable, 1x WM4 C Male, 2x MC4 Female, 6mm², 1500 V
GTIN (EAN)	4064675666424	
Qty.	1 pc(s).	

PVN DC 2I 1O 2MPP SPD1R EVO 11

Weidmüller Interface GmbH & Co. KG
Klingenbergstraße 26
D-32758 Detmold
Germany

www.weidmueller.com

Accessories

Crosshead screwdriver Phillips

VDE insulated crosshead screwdriver, for Phillips screws, SDIK PH DIN 7438, ISO 8764/2-PH, output to ISO 8764-PH, SoftFinish grip

General ordering data

Type	SDIK PH3 X 150	Version
Order No.	2749910000	Screwdriver, Blade width (B): 3 mm, 150 mm, Blade thickness (A): 3
GTIN (EAN)	4050118897210	
Qty.	1 pc(s).	

PV Sun Covers

General ordering data

Type	PV SUN COVER 30/19/18	Version
Order No.	8000086576	Photovoltaics
GTIN (EAN)	4064675845164	
Qty.	1 pc(s).	

PVN DC 2I 1O 2MPP SPD1R EVO 11

Weidmüller Interface GmbH & Co. KG
Klingenbergstraße 26
D-32758 Detmold
Germany

www.weidmueller.com

Accessories

Tools

- For flexible and solid conductors with special insulating materials
- High-quality stripping for industrial applications (complies with aircraft industry requirements)
- Specially shaped blades enable stripping of special types of insulation and conductor configurations
- Stripping length adjustable via end stop
- Very versatile thanks to interchangeable stripping units
- Stripping results reproduced accurately over and over again
- No damage to the conductor
- A long-lasting, reliable tool thanks to its sturdy design
- Integrated cutting function

General ordering data

Type	MULTI-STRIPAX PV	Version
Order No.	1190490000	Photovoltaics, Plug-in connector
GTIN (EAN)	4032248973262	
Qty.	1 pc(s).	

External fixing lugs

External attachment lugs 4-part set

General ordering data

Type	MF FPC	Version
Order No.	9536040000	FPC (polycarbonate empty enclosure), Mounting foot, Fixing lugs,
GTIN (EAN)	4032248009442	Height: 40 mm, Width: 19 mm, Depth: 35.5 mm, Material: Polyamide,
Qty.	1 pc(s).	Light Grey

PVN DC 2I 1O 2MPP SPD1R EVO 11

Weidmüller Interface GmbH & Co. KG
Klingenbergstraße 26
D-32758 Detmold
Germany

www.weidmueller.com

Drawings

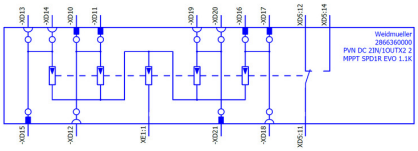

The reproduction, distribution and utilization of this document as well as the communication of its contents to others without explicit authorization is prohibited.
Offenders will be held liable for the payment of damages. Weidmueller exclusively reserves the right to file for patents, utility models or designs.
© Weidmueller Interface GmbH & Co. KG

The English version is binding

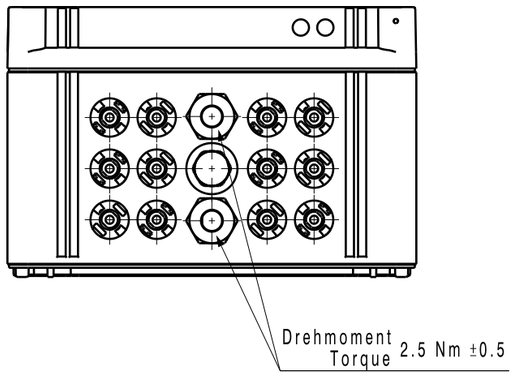

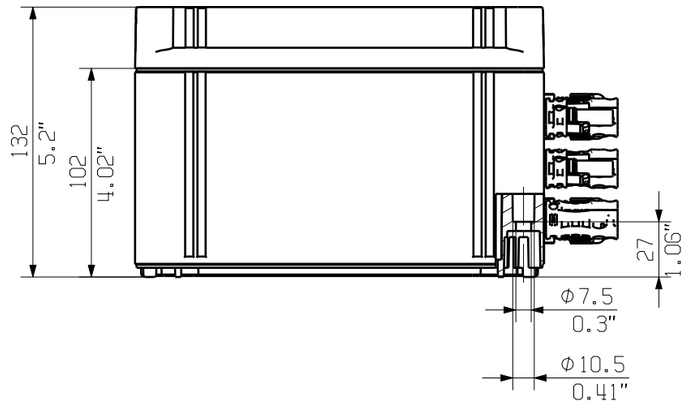

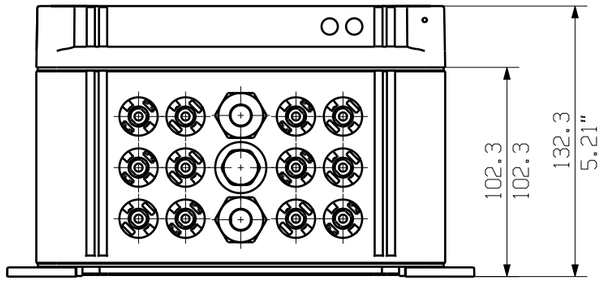

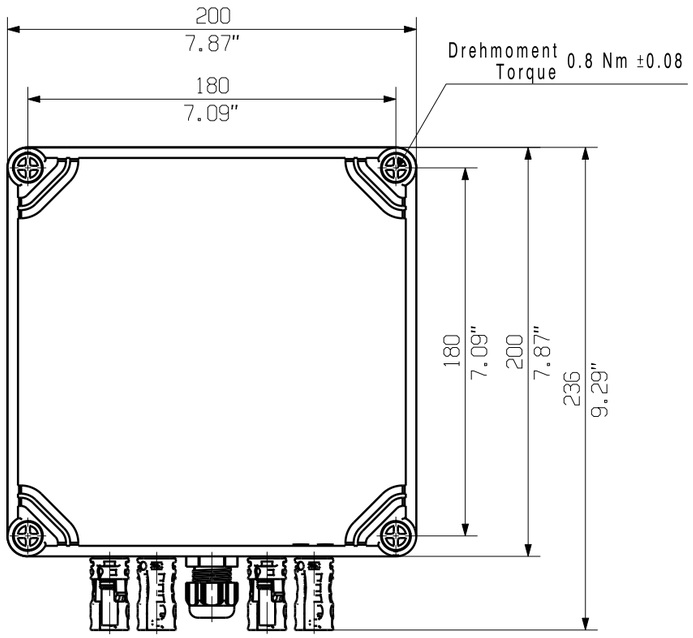

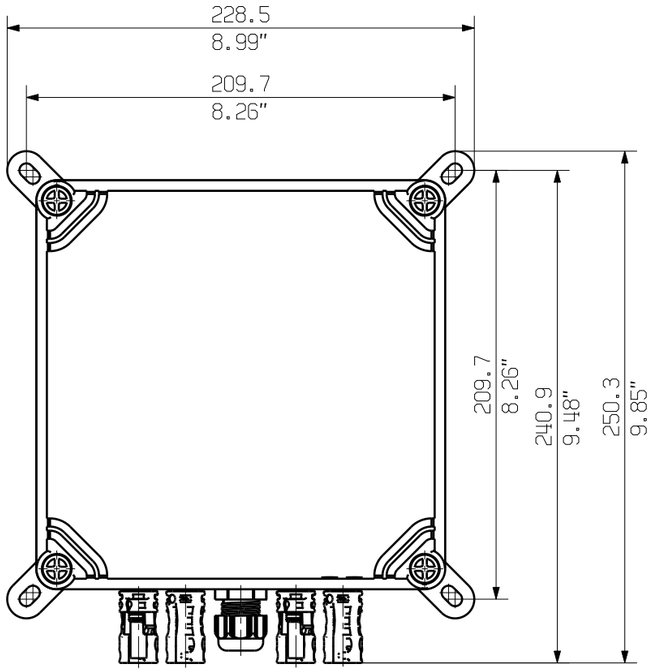

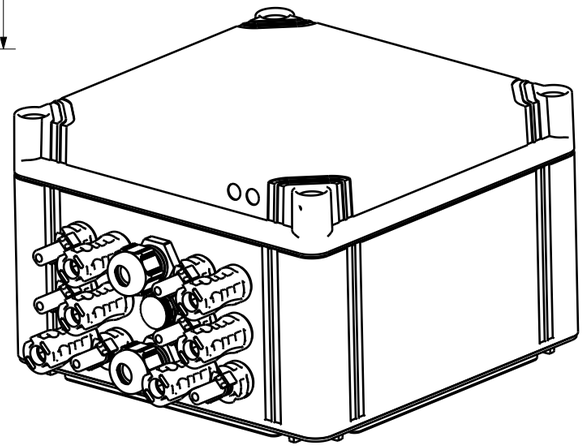

Darstellung mit Zubehoer
Shown with accessory 9536040000 MF FPC

Nicht im Lieferumfang enthalten!
Not included in delivery!

General Tolerances: WN700144-W.. / WN 212010 / ISO 2768-mK			Tolerances ISO 8015
Changes: EC00007387	0	Weidmüller	76339 (Drawing no.) 1 (Index)
Mat. No. (SAP) 2866360000			Scale: 1/3 Sheet 4 / 4
Drawings Assembly			
Drawn	Dreier, Bianca		2866360000 PVN DC 2IN/1OUTx2 2MPPT SPD1R EVO 1.1kV
Responsible	Wohlgemuth, Klaus		COMBINERBOX RESIDENTIAL/COMMERCIAL
Approved	Püschner, Klaus	06.05.2022	COMBINERBOX RESIDENTIAL/COMMERCIAL

A3