# A4C 4 DL OR

**Weidmüller Interface GmbH & Co. KG**
Klingenbergstraße 26
D-32758 Detmold
Germany

www.weidmueller.com

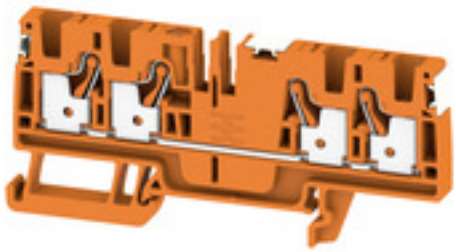

**Spring connection with PUSH IN Technology**
The innovative PUSH IN technology reduces the amount of time you spend on wiring to a minimum. Direct insertion guarantees high conductor pull-out forces and simple handling for all conductor types.

## General ordering data

| | |
|---|---|
| Version | Feed-through terminal, PUSH IN, 4 mm², 800 V, 32 A, orange |
| Order No. | 2799180000 |
| Type | A4C 4 DL OR |
| GTIN (EAN) | 4064675260714 |
| Qty. | 50 pc(s). |

# A4C 4 DL OR

**Weidmüller Interface GmbH & Co. KG**
Klingenbergstraße 26
D-32758 Detmold
Germany

www.weidmueller.com

## Technical data

### Dimensions and weights

| | | | |
|---|---|---|---|
| Depth | 39.5 mm | Depth (inches) | 1.555 inch |
| Height | 87.5 mm | Height (inches) | 3.445 inch |
| Width | 6.1 mm | Width (inches) | 0.24 inch |
| Net weight | 15.501 g | | |

### Temperatures

| | | | |
|---|---|---|---|
| Continuous operating temp., min. | -60 °C | Continuous operating temp., max. | 130 °C |

### Material data

| | | | |
|---|---|---|---|
| Material | Wemid | Colour | orange |
| Colour of operational elements | orange | UL 94 flammability rating | V-0 |

### Rating data IECEx/ATEX

| | | | |
|---|---|---|---|
| Certificate No. (ATEX) | TUEV16ATEX7909U | Certificate No. (IECEX) | IECEXTUR16.0036U |
| Max. voltage (ATEX) | 550 V | Current (ATEX) | 30 A |
| Wire cross section max. (ATEX) | 4 mm² | Max. voltage (IECEX) | 550 V |
| Current (IECEX) | 30 A | Wire cross section max. (IECEX) | 4 mm² |

### System specifications

| | | | |
|---|---|---|---|
| End cover plate required | Yes | Number of levels | 1 |
| Number of clamping points per level | 4 | Levels cross-connected internally | No |
| N-function | No | PE function | No |
| PEN function | No | | |

### Additional technical data

| | | | |
|---|---|---|---|
| Explosion-tested version | Yes | Snap-on | No |
| Type of fixing | Snap-on | Type of mounting | TS 35 |

### Conductors for clamping (additional connection)

| | |
|---|---|
| Connection type, additional connection | PUSH IN |

### Conductors for clamping (rated connection)

| | | | |
|---|---|---|---|
| Clamping range, max. | 6 mm² | | |
| Connection cross-section, stranded, max. | 6 mm² | | |
| Connection cross-section, stranded, min. | 0.5 mm² | | |
| Connection direction | top | | |
| Number of connections | 4 | | |
| Tube length for twin wire-end ferrule | Tube length | max. | 12 mm |
| | | min. | 8 mm |
| | Cross-section for conductor connection | min. | 0.5 mm² |
| | | max. | 1.5 mm² |

# A4C 4 DL OR

**Weidmüller Interface GmbH & Co. KG**
Klingenbergstraße 26
D-32758 Detmold
Germany

www.weidmueller.com

## Technical data

| | | | |
|---|---|---|---|
| Tube length for wire-end ferrule with plastic collar DIN 46228/4 | Cross-section for conductor connection | min. | 0.5 mm² |
| | | max. | 1 mm² |
| | Tube length | max. | 12 mm |
| | | min. | 6 mm |
| | Cross-section for conductor connection | min. | 1.5 mm² |
| | | max. | 2.5 mm² |
| | Tube length | max. | 12 mm |
| | | min. | 8 mm |
| | Cross-section for conductor connection | nominal | 4 mm² |
| | Tube length | max. | 12 mm |
| | | min. | 10 mm |
| Tube length for wire-end ferrule without plastic collar DIN 46228/1 | Cross-section for conductor connection | min. | 0.5 mm² |
| | | max. | 1 mm² |
| | Tube length | max. | 10 mm |
| | | min. | 6 mm |
| | Cross-section for conductor connection | min. | 1.5 mm² |
| | | max. | 2.5 mm² |
| | Tube length | max. | 12 mm |
| | | min. | 7 mm |
| | Cross-section for conductor connection | min. | 4 mm² |
| | | max. | 6 mm² |
| | Tube length | max. | 15 mm |
| | | min. | 9 mm |
| Twin wire-end ferrules, max. | 1.5 mm² | | |
| Twin wire-end ferrules, min. | 0.5 mm² | | |
| Type of connection | PUSH IN | | |
| Wire connection cross section, finely stranded, max. | 6 mm² | | |
| Wire connection cross section, finely stranded, min. | 0.5 mm² | | |
| Wire connection cross-section, finely stranded with wire-end ferrules DIN 46228/1, max. | 6 mm² | | |
| Wire connection cross-section, finely stranded with wire-end ferrules DIN 46228/1, min. | 0.5 mm² | | |
| Wire connection cross-section, finely stranded with wire-end ferrules DIN 46228/4, max. | 4 mm² | | |
| Wire connection cross-section, finely stranded with wire-end ferrules DIN 46228/4, min. | 0.5 mm² | | |
| Wire connection cross-section, solid core, max. | 4 mm² | | |
| Wire connection cross-section, solid core, min. | 0.5 mm² | | |

### Rating data

| | | | |
|---|---|---|---|
| Rated cross-section | 4 mm² | Rated voltage | 800 V |
| Rated DC voltage | 800 V | Rated current | 32 A |
| Volume resistance according to IEC 60947-7-x | 1 mΩ | Rated impulse withstand voltage | 8 kV |
| Pollution severity | 3 | Surge voltage category | III |

# A4C 4 DL OR

**Weidmüller Interface GmbH & Co. KG**
Klingenbergstraße 26
D-32758 Detmold
Germany

www.weidmueller.com

## Technical data

### Classifications

| | | | |
|---|---|---|---|
| ETIM 6.0 | EC000897 | ETIM 7.0 | EC000897 |
| ETIM 8.0 | EC000897 | ETIM 9.0 | EC000897 |
| ECLASS 9.0 | 27-14-11-20 | ECLASS 9.1 | 27-14-11-20 |
| ECLASS 10.0 | 27-14-11-20 | ECLASS 11.0 | 27-14-11-20 |
| ECLASS 12.0 | 27-14-11-20 | ECLASS 13.0 | 27-25-01-01 |

### Environmental Product Compliance

| | |
|---|---|
| REACH SVHC | / |

### Approvals

Approvals

### Downloads

| | |
|---|---|
| Approval/Certificate/Document of Conformity | 20-AV4BO-0269U<br>CE Declaration of Conformity<br>Confirmation of Standards EN 45545-2_2020-10 |
| Engineering Data | CAD data – STEP |
| Catalogues | Catalogues in PDF-format |

## A4C 4 DL OR

**Weidmüller Interface GmbH & Co. KG**
Klingenbergstraße 26
D-32758 Detmold
Germany

www.weidmueller.com

## Drawings

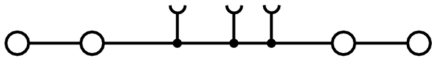

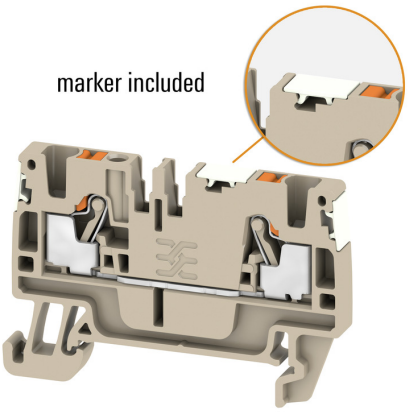

# A4C 4 DL OR

**Weidmüller Interface GmbH & Co. KG**
Klingenbergstraße 26
D-32758 Detmold
Germany

www.weidmueller.com

## Accessories

### Slotted screwdriver

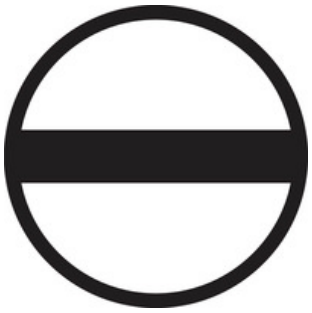

VDE insulated screwdriver sets, for working on live parts up to 1000 V AC and 1500 V DC, DIN EN 60900. IEC 900. Each piece is "GS" safety tested. Blade made from fully hardened, high-alloy chromium-vanadium-molybdenum steel, gun-metal finish.

### General ordering data

| | | |
|---|---|---|
| Type | SDIS SLIM 0.6X3.5X100 | Version |
| Order No. | 2749610000 | Mounting tool, Blade width (B): 3.5 mm, Blade length: 100 mm, Blade |
| GTIN (EAN) | 4050118896350 | thickness (A): 0.6 mm |
| Qty. | 1 pc(s). | |

### Custom printing

WS markers are the perfect match for the W-series connectors. Thanks to their system compatibility, the WS tags can also be used with the I-series and the Z-series. The large marking surfaces do not only permit long character strings but also multi-line text.
WS markers are ideal for labels with long, customised character strings. Thanks to the proven MultiCard format, printing with PrintJet CONNECT oder/or Plotter is possible.

- Can be fitted in strips or individually
- Markers in proven MultiCard format

**For custom printing:** Please send us a file of our labeling software M-Print PRO or M-Print PRO Online (without installation) for your labeling specifications.

### General ordering data

| | | |
|---|---|---|
| Type | WS 8/6 PLUS MC SDR | Version |
| Order No. | 1038820000 | WS, Terminal marker, 8 x 6 mm, Pitch in mm (P): 6.00 Weidmueller, |
| GTIN (EAN) | 4032248768073 | To customer specification |
| Qty. | 120 pc(s). | |

# A4C 4 DL OR

**Weidmüller Interface GmbH & Co. KG**
Klingenbergstraße 26
D-32758 Detmold
Germany

www.weidmueller.com

## Accessories

### WS 8/6

**WS/ DEK**
MultiMark terminal markers use an innovative composite material made from two components. The hard base contour of the marker snaps securely into the connector. The elastic surface finish makes the marker easy to mount. This specially punched material enables the strips to be stretched to accommodate the slight variations in spacing that tend to add up, especially with long terminal blocks. Another advantage: the excellent printability of the surface material guarantees durable and wear-resistant labelling. A print resolution of 300 dpi also produces a very legible script.
**Your benefits with MultiMark**

- Firm hold and durable printing
- Continuous strips save installation time
- Easy mounting thanks to an innovative composite material
- Large label field for optimal legibility
- High flexibility thanks to manufacturer independence

#### General ordering data

| | | |
|---|---|---|
| Type | WS 8/6 MM WS | Version |
| Order No. | 2007160000 | WS, Terminal marker, 8 x 6 mm, Weidmueller, white |
| GTIN (EAN) | 4050118391879 | |
| Qty. | 600 pc(s). | |

### Digital current clamp devices

Digital current clamp devices and attachments and adapters are used for measuring AC and DC currents. The significant advantage of these devices is that you can make a measurement without breaking the flow of current.

#### General ordering data

| | | |
|---|---|---|
| Type | ZUB MULTIMETER | Version |
| Order No. | 9205270000 | Multimeter |
| GTIN (EAN) | 4032248723522 | |
| Qty. | 1 pc(s). | |

# A4C 4 DL OR

**Weidmüller Interface GmbH & Co. KG**
Klingenbergstraße 26
D-32758 Detmold
Germany

www.weidmueller.com

## Accessories

### Plus

The Dekafix (DEK) marker is the universal marker for all conductor and plug-in connectors as well as for electronic sub-assemblies. The system is ideal for short number sequences and covers a wide range of ready-printed markers.
Strips for fast installation in only one work step. The printing is easy to read, rich in contrast and available in various widths.

- Large range of ready-to-use markers
- Strips for fast installation
- Terminal markers, suitable for all Weidmüller cable connectors
- Available as blank MultiCard or with standard printing

**For custom printing:** Please send us a file of our labeling software M-Print PRO or M-Print PRO Online (without installation) for your labeling specifications.

### General ordering data

| | | |
|---|---|---|
| Type | DEK 5/6 PLUS MC NE WS | Version |
| Order No. | 1011320000 | Dekafix, Terminal marker, 5 x 6 mm, Pitch in mm (P): 6.00 |
| GTIN (EAN) | 4032248717644 | Weidmueller, white |
| Qty. | 1,000 pc(s). | |

# A4C 4 DL OR

**Weidmüller Interface GmbH & Co. KG**
Klingenbergstraße 26
D-32758 Detmold
Germany

www.weidmueller.com

## Accessories

### DEK 5/6

**WS/ DEK**
MultiMark terminal markers use an innovative composite material made from two components. The hard base contour of the marker snaps securely into the connector. The elastic surface finish makes the marker easy to mount. This specially punched material enables the strips to be stretched to accommodate the slight variations in spacing that tend to add up, especially with long terminal blocks. Another advantage: the excellent printability of the surface material guarantees durable and wear-resistant labelling. A print resolution of 300 dpi also produces a very legible script.
**Your benefits with MultiMark**

- Firm hold and durable printing
- Continuous strips save installation time
- Easy mounting thanks to an innovative composite material
- Large label field for optimal legibility
- High flexibility thanks to manufacturer independence

#### General ordering data

| | | |
|---|---|---|
| Type | DEK 5/6 MM WS | Version |
| Order No. | 2007120000 | Dekafix, Terminal marker, 5 x 6 mm, Weidmueller, white |
| GTIN (EAN) | 4050118392104 | |
| Qty. | 600 pc(s). | |

### Blank

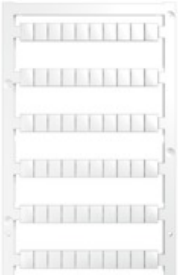

WS markers are the perfect match for the W-series connectors. Thanks to their system compatibility, the WS tags can also be used with the I-series and the Z-series. The large marking surfaces do not only permit long character strings but also multi-line text.
WS markers are ideal for labels with long, customised character strings. Thanks to the proven MultiCard format, printing with PrintJet CONNECT oder/or Plotter is possible.

- Can be fitted in strips or individually
- Markers in proven MultiCard format

**For custom printing:** Please send us a file of our labeling software M-Print PRO or M-Print PRO Online (without installation) for your labeling specifications.

#### General ordering data

| | | |
|---|---|---|
| Type | WS 8/6 PLUS MC NE WS | Version |
| Order No. | 1951880000 | WS, Terminal marker, 8 x 6 mm, Pitch in mm (P): 6.00 Weidmueller, |
| GTIN (EAN) | 4032248632114 | white |
| Qty. | 600 pc(s). | |

# A4C 4 DL OR

**Weidmüller Interface GmbH & Co. KG**
Klingenbergstraße 26
D-32758 Detmold
Germany

www.weidmueller.com

## Accessories

### A-Series

A partition plate is used for the optical separation of circuits or used for electrical isolation from neighbouring cross-connectors. In contrast to the end plate, the contour can be larger than the adjacent terminal blocks. However, it should not be smaller, as otherwise the required clearance and creepage distances within the application can no longer be maintained.

### General ordering data

| | | |
|---|---|---|
| Type | APP 2 | Version |
| Order No. | 2489090000 | A-series, Partition plate |
| GTIN (EAN) | 4050118499308 | |
| Qty. | 50 pc(s). | |

### Custom printing

The Dekafix (DEK) marker is the universal marker for all conductor and plug-in connectors as well as for electronic sub-assemblies. The system is ideal for short number sequences and covers a wide range of ready-printed markers.
Strips for fast installation in only one work step. The printing is easy to read, rich in contrast and available in various widths.

- Large range of ready-to-use markers
- Strips for fast installation
- Terminal markers, suitable for all Weidmüller cable connectors
- Available as blank MultiCard or with standard printing

**For custom printing:** Please send us a file of our labeling software M-Print PRO or M-Print PRO Online (without installation) for your labeling specifications.

### General ordering data

| | | |
|---|---|---|
| Type | DEK 5/6 MC SDR | Version |
| Order No. | 1609830000 | Dekafix, Terminal marker, 5 x 6 mm, Pitch in mm (P): 6.00 |
| GTIN (EAN) | 4008190456603 | Weidmueller, To customer specification |
| Qty. | 200 pc(s). | |
| Type | DEK 5/6 PLUS MC SDR | Version |
| Order No. | 1038650000 | Dekafix, Terminal marker, 5 x 6 mm, Pitch in mm (P): 6.00 |
| GTIN (EAN) | 4032248767908 | Weidmueller, To customer specification |
| Qty. | 200 pc(s). | |

# A4C 4 DL OR

**Weidmüller Interface GmbH & Co. KG**
Klingenbergstraße 26
D-32758 Detmold
Germany

www.weidmueller.com

## Accessories

### A-Series

Weidmüller's range of products includes end brackets that guarantee a permanent, reliable mounting on the terminal rail and prevent sliding. Versions with and without screws are available. The end brackets include marking options, also for group markers, and also a test plug holder.

### General ordering data

| | | |
|---|---|---|
| Type | AEB 35 SCL/1 V0 | Version |
| Order No. | 2661280000 | A-series, End bracket |
| GTIN (EAN) | 4050118702163 | |
| Qty. | 20 pc(s). | |
| Type | AEB 35 SCL/1 V0 GY | Version |
| Order No. | 2661290000 | A-series, End bracket |
| GTIN (EAN) | 4050118702170 | |
| Qty. | 20 pc(s). | |
| Type | AEB 35 SC/1 | Version |
| Order No. | 1991920000 | A-series, End bracket |
| GTIN (EAN) | 4050118376722 | |
| Qty. | 50 pc(s). | |
| Type | AEB 35 SC/1 BK | Version |
| Order No. | 2475310000 | A-series, End bracket |
| GTIN (EAN) | 4050118487114 | |
| Qty. | 50 pc(s). | |
| Type | AEB 35 SCL/1 V0 BK | Version |
| Order No. | 2661300000 | A-series, End bracket |
| GTIN (EAN) | 4050118702187 | |
| Qty. | 20 pc(s). | |

# A4C 4 DL OR

**Weidmüller Interface GmbH & Co. KG**
Klingenbergstraße 26
D-32758 Detmold
Germany

www.weidmueller.com

## Accessories

### Custom printing

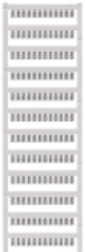

WS markers are the perfect match for the W-series connectors. Thanks to their system compatibility, the WS tags can also be used with the I-series and the Z-series. The large marking surfaces do not only permit long character strings but also multi-line text.
WS markers are ideal for labels with long, customised character strings. Thanks to the proven MultiCard format, printing with PrintJet CONNECT oder/or Plotter is possible.
• Can be fitted in strips or individually
• Markers in proven MultiCard format

**For custom printing:** Please send us a file of our labeling software M-Print PRO or M-Print PRO Online (without installation) for your labeling specifications.

### General ordering data

| | | |
|---|---|---|
| Type | WS 10/6 M PLUS MC SDR | Version |
| Order No. | 2007780000 | WS, Terminal marker, 10 x 6 mm, Pitch in mm (P): 6.00 Weidmueller, |
| GTIN (EAN) | 4050118393187 | Allen-Bradley, To customer specification |
| Qty. | 120 pc(s). | |
| Type | WS 10/6 PLUS MC SDR | Version |
| Order No. | 1046330000 | WS, Terminal marker, 10 x 6 mm, Pitch in mm (P): 6.00 Weidmueller, |
| GTIN (EAN) | 4032248782031 | Allen-Bradley, To customer specification |
| Qty. | 120 pc(s). | |
| Type | WS 10/6 MC M SDR | Version |
| Order No. | 1818410000 | WS, Terminal marker, 10 x 6 mm, Pitch in mm (P): 6.00 Weidmueller, |
| GTIN (EAN) | 4032248310883 | Allen-Bradley, To customer specification |
| Qty. | 120 pc(s). | |
| Type | WS 10/6 MC SDR | Version |
| Order No. | 1828460000 | WS, Terminal marker, 10 x 6 mm, Pitch in mm (P): 6.00 Weidmueller, |
| GTIN (EAN) | 4032248367399 | Allen-Bradley, To customer specification |
| Qty. | 120 pc(s). | |

# A4C 4 DL OR

**Weidmüller Interface GmbH & Co. KG**
Klingenbergstraße 26
D-32758 Detmold
Germany

www.weidmueller.com

## Accessories

### Blank

WS markers are the perfect match for the W-series connectors. Thanks to their system compatibility, the WS tags can also be used with the I-series and the Z-series. The large marking surfaces do not only permit long character strings but also multi-line text.
WS markers are ideal for labels with long, customised character strings. Thanks to the proven MultiCard format, printing with PrintJet CONNECT oder/or Plotter is possible.
• Can be fitted in strips or individually
• Markers in proven MultiCard format

**For custom printing:** Please send us a file of our labeling software M-Print PRO or M-Print PRO Online (without installation) for your labeling specifications.

### General ordering data

| | | |
|---|---|---|
| Type | WS 10/6 MC M NE GE | Version |
| Order No. | 1917430000 | WS, Terminal marker, 10 x 6 mm, Pitch in mm (P): 6.00 Weidmueller, |
| GTIN (EAN) | 4032248551637 | Allen-Bradley, yellow |
| Qty. | 600 pc(s). | |
| Type | WS 10/6 PLUS MC NE WS | Version |
| Order No. | 1046390000 | WS, Terminal marker, 10 x 6 mm, Pitch in mm (P): 6.00 Weidmueller, |
| GTIN (EAN) | 4032248782109 | Allen-Bradley, white |
| Qty. | 600 pc(s). | |
| Type | WS 10/6 M MC NE WS | Version |
| Order No. | 1818400000 | WS, Terminal marker, 10 x 6 mm, Pitch in mm (P): 6.00 Weidmueller, |
| GTIN (EAN) | 4032248310876 | Allen-Bradley, white |
| Qty. | 600 pc(s). | |
| Type | WS 10/6 MC M NE RT | Version |
| Order No. | 1917440000 | WS, Terminal marker, 10 x 6 mm, Pitch in mm (P): 6.00 Weidmueller, |
| GTIN (EAN) | 4032248551644 | Allen-Bradley, red |
| Qty. | 600 pc(s). | |
| Type | WS 10/6 MC M NE GN | Version |
| Order No. | 1917420000 | WS, Terminal marker, 10 x 6 mm, Pitch in mm (P): 6.00 Weidmueller, |
| GTIN (EAN) | 4032248551620 | Allen-Bradley, green |
| Qty. | 600 pc(s). | |
| Type | WS 10/6 M PLUS MC NE WS | Version |
| Order No. | 2003780000 | WS, Terminal marker, 10 x 6 mm, Pitch in mm (P): 6.00 Weidmueller, |
| GTIN (EAN) | 4050118424461 | Allen-Bradley, white |
| Qty. | 600 pc(s). | |
| Type | WS 10/6 MC NE WS | Version |
| Order No. | 1828450000 | WS, Terminal marker, 10 x 6 mm, Pitch in mm (P): 6.00 Weidmueller, |
| GTIN (EAN) | 4032248350513 | Allen-Bradley, white |
| Qty. | 600 pc(s). | |
| Type | WS 10/6 MC M NE BL | Version |
| Order No. | 1069080000 | WS, Terminal marker, 10 x 6 mm, Pitch in mm (P): 6.00 Weidmueller, |
| GTIN (EAN) | 4032248824618 | Allen-Bradley, blue |
| Qty. | 600 pc(s). | |

# A4C 4 DL OR

**Weidmüller Interface GmbH & Co. KG**
Klingenbergstraße 26
D-32758 Detmold
Germany

www.weidmueller.com

## Accessories

### 4 mm²

End plates are fitted to the open side of the last modular terminal before the end bracket. The use of an end plate ensures the function of the modular terminal and the specified rated voltage. It guarantees protection against contact with live parts and makes the final terminal finger-proof.

### General ordering data

| | | |
|---|---|---|
| Type | AEP 2C 4 BL | Version |
| Order No. | 2051690000 | A-series, End plate |
| GTIN (EAN) | 4050118411911 | |
| Qty. | 50 pc(s). | |
| Type | AEP 2C 4 | Version |
| Order No. | 2051680000 | A-series, End plate |
| GTIN (EAN) | 4050118411782 | |
| Qty. | 50 pc(s). | |
| Type | AEP 2C 4 OR | Version |
| Order No. | 2051710000 | A-series, End plate |
| GTIN (EAN) | 4050118411690 | |
| Qty. | 50 pc(s). | |
| Type | AEP 4C 4 OR | Version |
| Order No. | 2051920000 | A-series, End plate |
| GTIN (EAN) | 4050118412000 | |
| Qty. | 20 pc(s). | |

# A4C 4 DL OR

**Weidmüller Interface GmbH & Co. KG**
Klingenbergstraße 26
D-32758 Detmold
Germany

www.weidmueller.com

## Accessories

### Blank

The Dekafix (DEK) marker is the universal marker for all conductor and plug-in connectors as well as for electronic sub-assemblies. The system is ideal for short number sequences and covers a wide range of ready-printed markers.
Strips for fast installation in only one work step. The printing is easy to read, rich in contrast and available in various widths.

- Large range of ready-to-use markers
- Strips for fast installation
- Terminal markers, suitable for all Weidmüller cable connectors
- Available as blank MultiCard or with standard printing

**For custom printing:** Please send us a file of our labeling software M-Print PRO or M-Print PRO Online (without installation) for your labeling specifications.

### General ordering data

| | | |
|---|---|---|
| Type | DEK 5/6 MC NE OR | Version |
| Order No. | 1912090000 | Dekafix, Terminal marker, 5 x 6 mm, Pitch in mm (P): 6.00 |
| GTIN (EAN) | 4032248540525 | Weidmueller, orange |
| Qty. | 1,000 pc(s). | |
| Type | DEK 5/6 MC NE GN | Version |
| Order No. | 1238310000 | Dekafix, Terminal marker, 5 x 6 mm, Pitch in mm (P): 6.00 |
| GTIN (EAN) | 4050118271812 | Weidmueller, green |
| Qty. | 1,000 pc(s). | |
| Type | DEK 5/6 MC NE GR | Version |
| Order No. | 1238330000 | Dekafix, Terminal marker, 5 x 6 mm, Pitch in mm (P): 6.00 |
| GTIN (EAN) | 4050118323306 | Weidmueller, grey |
| Qty. | 1,000 pc(s). | |
| Type | DEK 5/6 MC NE WS | Version |
| Order No. | 1609820000 | Dekafix, Terminal marker, 5 x 6 mm, Pitch in mm (P): 6.00 |
| GTIN (EAN) | 4008190203436 | Weidmueller, white |
| Qty. | 1,000 pc(s). | |
| Type | DEK 5/6 MC NE BR | Version |
| Order No. | 1454900000 | Dekafix, Terminal marker, 5 x 6 mm, Pitch in mm (P): 6.00 |
| GTIN (EAN) | 4050118323313 | Weidmueller, brown |
| Qty. | 1,000 pc(s). | |
| Type | DEK 5/6 MC NE BL | Version |
| Order No. | 1238290000 | Dekafix, Terminal marker, 5 x 6 mm, Pitch in mm (P): 6.00 |
| GTIN (EAN) | 4050118267327 | Weidmueller, blue |
| Qty. | 1,000 pc(s). | |
| Type | DEK 5/6 MC NE GE | Version |
| Order No. | 1238280000 | Dekafix, Terminal marker, 5 x 6 mm, Pitch in mm (P): 6.00 |
| GTIN (EAN) | 4050118038750 | Weidmueller, yellow |
| Qty. | 1,000 pc(s). | |

# A4C 4 DL OR

**Weidmüller Interface GmbH & Co. KG**
Klingenbergstraße 26
D-32758 Detmold
Germany

www.weidmueller.com

## Accessories

### Marker holder

The marker holder offer the possibility of additional mounting of standard markers with a pitch of 5 or 5.1 mm. The angled holders can be optionally snaped together and could be mounted in all standard marking channels of the Klippon® Connect modular terminal blocks. Fitting marker types could be found under the respective accessories of the designation marking holder.

### General ordering data

| | | |
|---|---|---|
| Type | BZT 1 WS 10/5 | Version |
| Order No. | 1805490000 | Accessories, Marker holder |
| GTIN (EAN) | 4032248270231 | |
| Qty. | 100 pc(s). | |
| Type | BZT 1 ZA WS 10/5 | Version |
| Order No. | 1805520000 | Accessories, Marker holder |
| GTIN (EAN) | 4032248270248 | |
| Qty. | 100 pc(s). | |

### A-Series

Test adapters and test plugs are used for the electrical connection between terminal blocks and the test equipment. In this way, an electrical contact can be established in the wired state and measurements can be done easily.

### General ordering data

| | | |
|---|---|---|
| Type | ATPG 1.5-10 L | Version |
| Order No. | 1991890000 | Test adapter (terminal), 1.5 mm², 250 V, 0.2 A |
| GTIN (EAN) | 4050118376647 | |
| Qty. | 50 pc(s). | |
| Type | ATPG 4 MI-R | Version |
| Order No. | 1991860000 | Test adapter (terminal), 1.5 mm², 250 V, 0.2 A |
| GTIN (EAN) | 4050118376661 | |
| Qty. | 50 pc(s). | |

# A4C 4 DL OR

**Weidmüller Interface GmbH & Co. KG**
Klingenbergstraße 26
D-32758 Detmold
Germany

www.weidmueller.com

## Accessories

### 4 mm²

The plug-in cross-connections feature easy handling and quick installation. This saves a great deal of time during installation in comparison with screwed solutions.

### General ordering data

| | | |
|---|---|---|
| Type | ZQV 4N/7 | Version |
| Order No. | 1528020000 | Cross-connector (terminal), Plugged, Number of poles: 7, Pitch in mm |
| GTIN (EAN) | 4050118332780 | (P): 6.10, Insulated: Yes, 32 A, orange |
| Qty. | 20 pc(s). | |
| Type | ZQV 4N/9 BL | Version |
| Order No. | 1528220000 | Cross-connector (terminal), Plugged, Number of poles: 9, Pitch in mm |
| GTIN (EAN) | 4050118333107 | (P): 6.10, Insulated: Yes, 32 A, blue |
| Qty. | 20 pc(s). | |
| Type | ZQV 4N/2 | Version |
| Order No. | 1527930000 | Cross-connector (terminal), Plugged, Number of poles: 2, Pitch in mm |
| GTIN (EAN) | 4050118332766 | (P): 6.10, Insulated: Yes, 32 A, orange |
| Qty. | 60 pc(s). | |
| Type | ZQV 4N/3 | Version |
| Order No. | 1527940000 | Cross-connector (terminal), Plugged, Number of poles: 3, Pitch in mm |
| GTIN (EAN) | 4050118332865 | (P): 6.10, Insulated: Yes, 32 A, orange |
| Qty. | 60 pc(s). | |
| Type | ZQV 4N/6 BL | Version |
| Order No. | 1528170000 | Cross-connector (terminal), Plugged, Number of poles: 6, Pitch in mm |
| GTIN (EAN) | 4050118332926 | (P): 6.10, Insulated: Yes, 32 A, blue |
| Qty. | 20 pc(s). | |
| Type | ZQV 4N/2 BL | Version |
| Order No. | 1528040000 | Cross-connector (terminal), Plugged, Number of poles: 2, Pitch in mm |
| GTIN (EAN) | 4050118332773 | (P): 6.10, Insulated: Yes, 32 A, blue |
| Qty. | 60 pc(s). | |
| Type | ZQV 4N/4 | Version |
| Order No. | 1527970000 | Cross-connector (terminal), Plugged, Number of poles: 4, Pitch in mm |
| GTIN (EAN) | 4050118332889 | (P): 6.10, Insulated: Yes, 32 A, orange |
| Qty. | 60 pc(s). | |
| Type | ZQV 4N/10 | Version |
| Order No. | 1528090000 | Cross-connector (terminal), Plugged, Number of poles: 10, Pitch in mm |
| GTIN (EAN) | 4050118332896 | (P): 6.10, Insulated: Yes, 32 A, orange |
| Qty. | 20 pc(s). | |
| Type | ZQV 4N/5 | Version |
| Order No. | 1527980000 | Cross-connector (terminal), Plugged, Number of poles: 5, Pitch in mm |
| GTIN (EAN) | 4050118332759 | (P): 6.10, Insulated: Yes, 32 A, orange |
| Qty. | 60 pc(s). | |
| Type | ZQV 4N/7 BL | Version |
| Order No. | 1528180000 | Cross-connector (terminal), Plugged, Number of poles: 7, Pitch in mm |
| GTIN (EAN) | 4050118333114 | (P): 6.10, Insulated: Yes, 32 A, blue |
| Qty. | 20 pc(s). | |

# A4C 4 DL OR

**Weidmüller Interface GmbH & Co. KG**
Klingenbergstraße 26
D-32758 Detmold
Germany

www.weidmueller.com

## Accessories

| | | |
|---|---|---|
| Type | ZQV 4N/6 | Version |
| Order No. | 1527990000 | Cross-connector (terminal), Plugged, Number of poles: 6, Pitch in mm |
| GTIN (EAN) | 4050118332919 | (P): 6.10, Insulated: Yes, 32 A, orange |
| Qty. | 20 pc(s). | |
| Type | ZQV 4N/4 BL | Version |
| Order No. | 1528120000 | Cross-connector (terminal), Plugged, Number of poles: 4, Pitch in mm |
| GTIN (EAN) | 4050118332872 | (P): 6.10, Insulated: Yes, 32 A, blue |
| Qty. | 60 pc(s). | |
| Type | ZQV 4N/9 | Version |
| Order No. | 1528070000 | Cross-connector (terminal), Plugged, Number of poles: 9, Pitch in mm |
| GTIN (EAN) | 4050118332797 | (P): 6.10, Insulated: Yes, 32 A, orange |
| Qty. | 20 pc(s). | |
| Type | ZQV 4N/50 | Version |
| Order No. | 1528130000 | Cross-connector (terminal), Plugged, Number of poles: 50, Pitch in mm |
| GTIN (EAN) | 4050118332902 | (P): 6.10, Insulated: Yes, 32 A, orange |
| Qty. | 5 pc(s). | |
| Type | ZQV 4N/50 BL | Version |
| Order No. | 1528240000 | Cross-connector (terminal), Plugged, Number of poles: 50, Pitch in mm |
| GTIN (EAN) | 4050118333121 | (P): 6.10, Insulated: Yes, 32 A, blue |
| Qty. | 5 pc(s). | |
| Type | ZQV 4N/8 BL | Version |
| Order No. | 1528190000 | Cross-connector (terminal), Plugged, Number of poles: 8, Pitch in mm |
| GTIN (EAN) | 4050118332858 | (P): 6.10, Insulated: Yes, 32 A, blue |
| Qty. | 20 pc(s). | |
| Type | ZQV 4N/5 BL | Version |
| Order No. | 1528140000 | Cross-connector (terminal), Plugged, Number of poles: 5, Pitch in mm |
| GTIN (EAN) | 4050118333015 | (P): 6.10, Insulated: Yes, 32 A, blue |
| Qty. | 60 pc(s). | |
| Type | ZQV 4N/8 | Version |
| Order No. | 1528030000 | Cross-connector (terminal), Plugged, Number of poles: 8, Pitch in mm |
| GTIN (EAN) | 4050118332841 | (P): 6.10, Insulated: Yes, 32 A, orange |
| Qty. | 20 pc(s). | |
| Type | ZQV 4N/10 BL | Version |
| Order No. | 1528230000 | Cross-connector (terminal), Plugged, Number of poles: 10, Pitch in mm |
| GTIN (EAN) | 4050118333138 | (P): 6.10, Insulated: Yes, 32 A, blue |
| Qty. | 20 pc(s). | |
| Type | ZQV 4N/3 BL | Version |
| Order No. | 1528080000 | Cross-connector (terminal), Plugged, Number of poles: 3, Pitch in mm |
| GTIN (EAN) | 4050118333008 | (P): 6.10, Insulated: Yes, 32 A, blue |
| Qty. | 60 pc(s). | |

# A4C 4 DL OR

**Weidmüller Interface GmbH & Co. KG**
Klingenbergstraße 26
D-32758 Detmold
Germany

www.weidmueller.com

## Accessories

### A-Series

Warning covers with a flash symbol provide more safety for man and machine. They are used where external voltage must be indicated within the application.

### General ordering data

| | | |
|---|---|---|
| Type | AAM 4 YE FLASH | Version |
| Order No. | 2635560000 | Terminal marker, 10 x 6.1 mm, Pitch in mm (P): 6.00 yellow |
| GTIN (EAN) | 4050118674507 | |
| Qty. | 40 pc(s). | |