A2C 35 DL BL

Weidmüller Interface GmbH & Co. KG
Klingenbergstraße 26
D-32758 Detmold
Germany

www.weidmueller.com

Power feed-in
Our wide range of W-Series terminal blocks with our WPD main line branch terminals, which are optimised to guarantee both convenience and space gains, ensures a secure and convenient connection at the power feed-in.

General ordering data

Version	Feed-through terminal, PUSH IN, 35 mm², 1000 V, 125 A, blue
Order No.	2755890000
Type	A2C 35 DL BL
GTIN (EAN)	4064675005032
Qty.	10 pc(s).

A2C 35 DL BL

Weidmüller Interface GmbH & Co. KG
Klingenbergstraße 26
D-32758 Detmold
Germany

www.weidmueller.com

Technical data

Dimensions and weights

Depth	71.5 mm	Depth (inches)	2.815 inch
Height	101.5 mm	Height (inches)	3.996 inch
Width	16 mm	Width (inches)	0.63 inch
Net weight	84 g		

Temperatures

Storage temperature	-25 °C...55 °C	Continuous operating temp., min.	-60 °C
Continuous operating temp., max.	130 °C		

Material data

Material	Wemid	Colour	blue
Colour of operational elements	orange	UL 94 flammability rating	V-0

Rating data IECEx/ATEX

Certificate No. (ATEX)	TUEV16ATEX7909U	Certificate No. (IECEX)	IECEXTUR16.0036U
Max. voltage (ATEX)	880 V	Current (ATEX)	105 A
Wire cross section max. (ATEX)	35 mm²	Max. voltage (IECEX)	880 V
Current (IECEX)	105 A	Wire cross section max. (IECEX)	35 mm²

System specifications

End cover plate required	No	Number of levels	1
Number of clamping points per level	2	Levels cross-connected internally	No
Rail	TS 35	N-function	No
PE function	No	PEN function	No

Additional technical data

Explosion-tested version	Yes	Open sides	closed
Snap-on	Yes	Type of fixing	Snap-on
Type of mounting	Snap-on		

Conductors for clamping (additional connection)

Connection type, additional connection	PUSH IN

A2C 35 DL BL

Weidmüller Interface GmbH & Co. KG
Klingenbergstraße 26
D-32758 Detmold
Germany

www.weidmueller.com

Technical data

Conductors for clamping (rated connection)

Blade size	1.0 x 5.5 mm	Clamping range, max.	35 mm²
Clamping range, min.	2.5 mm²	Connection cross-section, stranded, max.	35 mm²
Connection cross-section, stranded, min.	10 mm²	Connection direction	on side
Number of connections	2	Stripping length	25 mm
Twin wire-end ferrules, max.	10 mm²	Twin wire-end ferrules, min.	2.5 mm²
Type of connection	PUSH IN	Wire connection cross section AWG, max.	AWG 2
Wire connection cross section AWG, min.	AWG 12	Wire connection cross section, finely stranded, max.	35 mm²
Wire connection cross section, finely stranded, min.	10 mm²	Wire connection cross-section, finely stranded with wire-end ferrules DIN 46228/1, max.	35 mm²
Wire connection cross-section, finely stranded with wire-end ferrules DIN 46228/1, min.	2.5 mm²	Wire connection cross-section, finely stranded with wire-end ferrules DIN 46228/4, max.	35 mm²
Wire connection cross-section, finely stranded with wire-end ferrules DIN 46228/4, min.	2.5 mm²	Wire connection cross-section, solid core, max.	16 mm²
Wire connection cross-section, solid core, min.	2.5 mm²		

General

Rail	TS 35	Standards	IEC 60947-7-1
Wire connection cross section AWG, max.	AWG 2	Wire connection cross section AWG, min.	AWG 12

Rating data

Rated cross-section	35 mm²	Rated voltage	1,000 V
Rated DC voltage	1,500 V	Rated current	125 A
Current at maximum wires	125 A	Standards	IEC 60947-7-1
Volume resistance according to IEC 60947-7-x	0.26 mΩ	Rated impulse withstand voltage	8 kV
Power loss in accordance with IEC 60947-7-x	4 W	Pollution severity	3
Surge voltage category	III		

Classifications

ETIM 6.0	EC000897	ETIM 7.0	EC000897
ETIM 8.0	EC000897	ETIM 9.0	EC000897
ECLASS 9.0	27-14-11-20	ECLASS 9.1	27-14-11-20
ECLASS 10.0	27-14-11-20	ECLASS 11.0	27-14-11-20
ECLASS 12.0	27-14-11-20	ECLASS 13.0	27-25-01-01

Environmental Product Compliance

REACH SVHC	/

A2C 35 DL BL

Weidmüller Interface GmbH & Co. KG
Klingenbergstraße 26
D-32758 Detmold
Germany

www.weidmueller.com

Technical data

Approvals

Approvals	

Downloads

Approval/Certificate/Document of Conformity	Atestation of Conformity UKCA Ex Attestation of Conformity UKCA Ex Certificate CE Declaration of Conformity UKCA declaration of conformity Confirmation of Standards EN 45545-2_2020-10
Engineering Data	CAD data – STEP
Catalogues	Catalogues in PDF-format

A2C 35 DL BL

Weidmüller Interface GmbH & Co. KG
Klingenbergstraße 26
D-32758 Detmold
Germany

www.weidmueller.com

Drawings

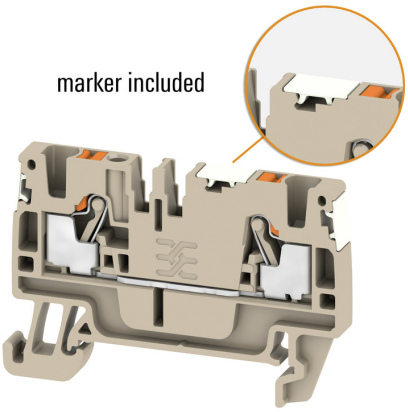

A2C 35 DL BL

Weidmüller Interface GmbH & Co. KG
Klingenbergstraße 26
D-32758 Detmold
Germany

www.weidmueller.com

Accessories

A-Series

Power feed-in
Our wide range of W-Series terminal blocks with our WPD main line branch terminals, which are optimised to guarantee both convenience and space gains, ensures a secure and convenient connection at the power feed-in.

General ordering data

Type	AAC 35 2X6 BK-YL	Version
Order No.	2583190000	Auxiliary connection (terminal), 6 mm², Number of connections: 2
GTIN (EAN)	4050118593327	
Qty.	5 pc(s).	
Type	AAC 35 2X6	Version
Order No.	2583090000	Auxiliary connection (terminal), 6 mm², Number of connections: 2
GTIN (EAN)	4050118592771	
Qty.	5 pc(s).	
Type	AAC 35 2X6 GN-YL	Version
Order No.	2583180000	Auxiliary connection (terminal), 6 mm², Number of connections: 2
GTIN (EAN)	4050118593310	
Qty.	5 pc(s).	
Type	AAC 35 2X6 BL	Version
Order No.	2583170000	Auxiliary connection (terminal), 6 mm², Number of connections: 2
GTIN (EAN)	4050118593303	
Qty.	5 pc(s).	

A-Series

Test adapters and test plugs are used for the electrical connection between terminal blocks and the test equipment. In this way, an electrical contact can be established in the wired state and measurements can be done easily.

General ordering data

Type	ATPG 2.5 MI-R	Version
Order No.	1991960000	Test adapter (terminal), 1.5 mm², 250 V, 0.2 A
GTIN (EAN)	4050118376685	
Qty.	50 pc(s).	
Type	ATPG 1.5-10 L	Version
Order No.	1991890000	Test adapter (terminal), 1.5 mm², 250 V, 0.2 A
GTIN (EAN)	4050118376647	
Qty.	50 pc(s).	

A2C 35 DL BL

Weidmüller Interface GmbH & Co. KG
Klingenbergstraße 26
D-32758 Detmold
Germany

www.weidmueller.com

Accessories

Type	ATPG 2.5/5	Version
Order No.	2041180000	Test adapter (terminal), 1.5 mm², 250 V, 0.2 A
GTIN (EAN)	4050118409505	
Qty.	25 pc(s).	
Type	ATPG 4 MI-R	Version
Order No.	1991860000	Test adapter (terminal), 1.5 mm², 250 V, 0.2 A
GTIN (EAN)	4050118376661	
Qty.	50 pc(s).	
Type	ATPG 10 MI-R	Version
Order No.	1991870000	Test adapter (terminal), 1.5 mm², 250 V, 0.2 A
GTIN (EAN)	4050118376678	
Qty.	50 pc(s).	
Type	ATPG 2.5/3	Version
Order No.	2041190000	Test adapter (terminal), 1.5 mm², 250 V, 0.2 A
GTIN (EAN)	4050118409604	
Qty.	25 pc(s).	
Type	ATPG 6 MI-R	Version
Order No.	1991930000	Test adapter (terminal), 1.5 mm², 250 V, 0.2 A
GTIN (EAN)	4050118376555	
Qty.	50 pc(s).	
Type	ATPG 1.5 MI-R	Version
Order No.	1991880000	Test adapter (terminal), 1.5 mm², 250 V, 0.2 A
GTIN (EAN)	4050118376715	
Qty.	50 pc(s).	

Slotted screwdriver

VDE insulated screwdriver sets, for working on live parts up to 1000 V AC and 1500 V DC, DIN EN 60900. IEC 900. Each piece is "GS" safety tested. Blade made from fully hardened, high-alloy chromium-vanadium-molybdenum steel, gun-metal finish.

General ordering data

Type	SDIS SLIM 0.6X3.5X100	Version
Order No.	2749610000	Mounting tool, Blade width (B): 3.5 mm, Blade length: 100 mm, Blade
GTIN (EAN)	4050118896350	thickness (A): 0.6 mm
Qty.	1 pc(s).	

A2C 35 DL BL

Weidmüller Interface GmbH & Co. KG
Klingenbergstraße 26
D-32758 Detmold
Germany

www.weidmueller.com

Accessories

A-Series

Weidmüller's range of products includes end brackets that guarantee a permanent, reliable mounting on the terminal rail and prevent sliding. Versions with and without screws are available. The end brackets include marking options, also for group markers, and also a test plug holder.

General ordering data

Type	AEB 35 SCL/1 V0 BK	Version
Order No.	2661300000	A-series, End bracket
GTIN (EAN)	4050118702187	
Qty.	20 pc(s).	
Type	AEB 35 SCL/1 V0	Version
Order No.	2661280000	A-series, End bracket
GTIN (EAN)	4050118702163	
Qty.	20 pc(s).	
Type	AEB 35 SCL/1 V0 GY	Version
Order No.	2661290000	A-series, End bracket
GTIN (EAN)	4050118702170	
Qty.	20 pc(s).	
Type	AEB 35 SC/1 BK	Version
Order No.	2475310000	A-series, End bracket
GTIN (EAN)	4050118487114	
Qty.	50 pc(s).	
Type	AEB 35 SC/1	Version
Order No.	1991920000	A-series, End bracket
GTIN (EAN)	4050118376722	
Qty.	50 pc(s).	

35 mm²

Power feed-in
Our wide range of W-Series terminal blocks with our WPD main line branch terminals, which are optimised to guarantee both convenience and space gains, ensures a secure and convenient connection at the power feed-in.

General ordering data

Type	ZQV 35N/2	Version
Order No.	2634950000	Cross-connector (terminal), Plugged, Number of poles: 2, Pitch in mm
GTIN (EAN)	4050118694208	(P): 16.00, 125 A, orange
Qty.	10 pc(s).	

A2C 35 DL BL

Weidmüller Interface GmbH & Co. KG
Klingenbergstraße 26
D-32758 Detmold
Germany

www.weidmueller.com

Accessories

Blank

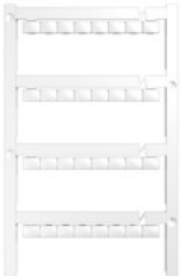

The Dekafix (DEK) marker is the universal marker for all conductor and plug-in connectors as well as for electronic sub-assemblies. The system is ideal for short number sequences and covers a wide range of ready-printed markers.
Strips for fast installation in only one work step. The printing is easy to read, rich in contrast and available in various widths.

- Large range of ready-to-use markers
- Strips for fast installation
- Terminal markers, suitable for all Weidmüller cable connectors
- Available as blank MultiCard or with standard printing

For custom printing: Please send us a file of our labeling software M-Print PRO or M-Print PRO Online (without installation) for your labeling specifications.

General ordering data

Type	DEK 5/7.5 MC NE WS	Version
Order No.	1720620000	Dekafix, Terminal marker, 5 x 7.5 mm, Pitch in mm (P): 7.50
GTIN (EAN)	4008190362300	Weidmueller, white
Qty.	320 pc(s).	

Step-down bridges

Power feed-in
Our wide range of W-Series terminal blocks with our WPD main line branch terminals, which are optimised to guarantee both convenience and space gains, ensures a secure and convenient connection at the power feed-in.

General ordering data

Type	ZQV 35N-16	Version
Order No.	2562660000	Cross-connector (terminal), Plugged, Number of poles: 2, Pitch in mm
GTIN (EAN)	4050118571264	(P): 17.80, Insulated: Yes, 76 A, orange
Qty.	10 pc(s).	
Type	ZQV 35N-10	Version
Order No.	2562670000	Cross-connector (terminal), Plugged, Number of poles: 2, Pitch in mm
GTIN (EAN)	4050118571271	(P): 16.30, Insulated: Yes, 57 A, orange
Qty.	10 pc(s).	

A2C 35 DL BL

Weidmüller Interface GmbH & Co. KG
Klingenbergstraße 26
D-32758 Detmold
Germany

www.weidmueller.com

Accessories

Marker holder

The marker holder offer the possibility of additional mounting of standard markers with a pitch of 5 or 5.1 mm. The angled holders can be optionally snaped together and could be mounted in all standard marking channels of the Klippon® Connect modular terminal blocks. Fitting marker types could be found under the respective accessories of the designation marking holder.

General ordering data

Type	BZT 1 WS 10/5	Version
Order No.	1805490000	Accessories, Marker holder
GTIN (EAN)	4032248270231	
Qty.	100 pc(s).	
Type	BZT 1 ZA WS 10/5	Version
Order No.	1805520000	Accessories, Marker holder
GTIN (EAN)	4032248270248	
Qty.	100 pc(s).	

Custom printing

The Dekafix (DEK) marker is the universal marker for all conductor and plug-in connectors as well as for electronic sub-assemblies. The system is ideal for short number sequences and covers a wide range of ready-printed markers.
Strips for fast installation in only one work step. The printing is easy to read, rich in contrast and available in various widths.

- Large range of ready-to-use markers
- Strips for fast installation
- Terminal markers, suitable for all Weidmüller cable connectors
- Available as blank MultiCard or with standard printing

For custom printing: Please send us a file of our labeling software M-Print PRO or M-Print PRO Online (without installation) for your labeling specifications.

General ordering data

Type	DEK 5/7.5 MC SDR	Version
Order No.	1770490000	Dekafix, Terminal marker, 5 x 7.5 mm, Pitch in mm (P): 7.50
GTIN (EAN)	4032248119738	Weidmueller, To customer specification
Qty.	64 pc(s).	

A2C 35 DL BL

Weidmüller Interface GmbH & Co. KG
Klingenbergstraße 26
D-32758 Detmold
Germany

www.weidmueller.com

Accessories

Slotted screwdriver

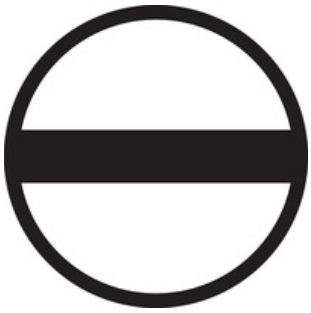

Slotted screwdriver with rounded blade SD DIN 5265, ISO 2380/2, output to DIN 5264, ISO 2380/1. ChromTop tip, SoftFinish grip

General ordering data

Type	SDS 1.0X5.5X150	Version
Order No.	9008350000	Screwdriver, Screwdriver
GTIN (EAN)	4032248056316	
Qty.	1 pc(s).	

Type	SDS 1.0X5.5X150	Version
Order No.	2749380000	Screwdriver, Blade width (B): 5.5 mm, Blade length: 150 mm, Blade thickness (A): 1 mm
GTIN (EAN)	4050118895605	
Qty.	1 pc(s).	