A2T 4 VL DL

Weidmüller Interface GmbH & Co. KG
Klingenbergstraße 26
D-32758 Detmold
Germany

www.weidmueller.com

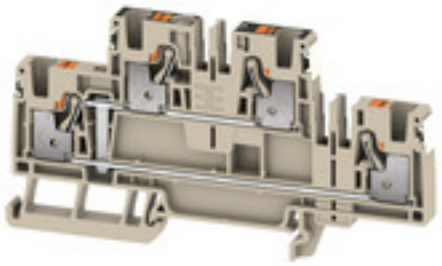

Spring connection with PUSH IN Technology
The innovative PUSH IN technology reduces the amount of time you spend on wiring to a minimum. Direct insertion guarantees high conductor pull-out forces and simple handling for all conductor types.

General ordering data

Version	Feed-through terminal, Double-tier terminal, PUSH IN, 4 mm², 800 V, 32 A, dark beige
Order No.	2675190000
Type	A2T 4 VL DL
GTIN (EAN)	4050118817546
Qty.	50 pc(s).

A2T 4 VL DL

Weidmüller Interface GmbH & Co. KG
Klingenbergstraße 26
D-32758 Detmold
Germany

www.weidmueller.com

Technical data

Dimensions and weights

Depth	54.5 mm	Depth (inches)	2.146 inch
Depth including DIN rail	54.5 mm	Height	100 mm
Height (inches)	3.937 inch	Width	6.1 mm
Width (inches)	0.24 inch	Net weight	23.46 g

Temperatures

Storage temperature	-25 °C...55 °C	Continuous operating temp., min.	-60 °C
Continuous operating temp., max.	130 °C		

Material data

Material	Wemid	Colour	dark beige
UL 94 flammability rating	V-0		

Rating data IECEx/ATEX

Certificate No. (ATEX)	TUEV16ATEX7909U	Certificate No. (IECEX)	IECEXTUR16.0036U
Max. voltage (ATEX)	550 V	Current (ATEX)	25 A
Wire cross section max. (ATEX)	4 mm²	Max. voltage (IECEX)	550 V
Current (IECEX)	25 A	Wire cross section max. (IECEX)	4 mm²

System specifications

End cover plate required	Yes	Number of potentials	1
Number of levels	2	Number of clamping points per level	2
Number of potentials per tier	1	Levels cross-connected internally	Yes
Rail	TS 35		

Additional technical data

Explosion-tested version	Yes	Open sides	right
Snap-on	Yes	Type of mounting	TS 35

Conductors for clamping (additional connection)

Connection type, additional connection	PUSH IN

Conductors for clamping (rated connection)

Blade size	0.6 x 3.5 mm		
Clamping range, max.	6 mm²		
Clamping range, min.	0.14 mm²		
Connection cross-section, stranded, max.	6 mm²		
Connection cross-section, stranded, min.	0.5 mm²		
Connection direction	top		
Number of connections	4		
Stripping length	12 mm		
Tube length for twin wire-end ferrule	Tube length	max.	12 mm
		min.	8 mm
	Cross-section for conductor connection	min.	0.5 mm²
		max.	1.5 mm²

A2T 4 VL DL

Weidmüller Interface GmbH & Co. KG
Klingenbergstraße 26
D-32758 Detmold
Germany

www.weidmueller.com

Technical data

Tube length for wire-end ferrule with plastic collar DIN 46228/4	Tube length	max.	12 mm
		min.	6 mm
	Cross-section for conductor connection	min.	0.5 mm²
		max.	1 mm²
	Tube length	max.	12 mm
		min.	8 mm
	Cross-section for conductor connection	min.	1.5 mm²
		max.	2.5 mm²
	Tube length	max.	12 mm
		min.	10 mm
	Cross-section for conductor connection	nominal	4 mm²
Tube length for wire-end ferrule without plastic collar DIN 46228/1	Tube length	max.	10 mm
		min.	6 mm
	Cross-section for conductor connection	min.	0.5 mm²
		max.	1 mm²
	Tube length	max.	12 mm
		min.	7 mm
	Cross-section for conductor connection	min.	1.5 mm²
		max.	2.5 mm²
	Tube length	max.	15 mm
		min.	9 mm
	Cross-section for conductor connection	min.	4 mm²
		max.	6 mm²
Twin wire-end ferrules, max.	1.5 mm²		
Twin wire-end ferrules, min.	0.5 mm²		
Type of connection	PUSH IN		
Type of connection 2	PUSH IN		
Wire connection cross section AWG, max.	AWG 12		
Wire connection cross section AWG, min.	AWG 26		
Wire connection cross section, finely stranded, max.	6 mm²		
Wire connection cross section, finely stranded, min.	0.5 mm²		
Wire connection cross-section, finely stranded with wire-end ferrules DIN 46228/1, max.	6 mm²		
Wire connection cross-section, finely stranded with wire-end ferrules DIN 46228/1, min.	0.5 mm²		
Wire connection cross-section, finely stranded with wire-end ferrules DIN 46228/4, max.	4 mm²		
Wire connection cross-section, finely stranded with wire-end ferrules DIN 46228/4, min.	0.5 mm²		
Wire connection cross-section, solid core, max.	4 mm²		
Wire connection cross-section, solid core, min.	0.5 mm²		

General

Rail	TS 35	Standards	IEC 60947-7-1
Wire connection cross section AWG, max.	AWG 12	Wire connection cross section AWG, min.	AWG 26

A2T 4 VL DL

Weidmüller Interface GmbH & Co. KG
Klingenbergstraße 26
D-32758 Detmold
Germany

www.weidmueller.com

Technical data

Rating data

Rated cross-section	4 mm²	Rated voltage	800 V
Rated DC voltage	800 V	Rated current	32 A
Current at maximum wires	32 A	Standards	IEC 60947-7-1
Volume resistance according to IEC 60947-7-x	1 mΩ	Rated impulse withstand voltage	8 kV
Power loss in accordance with IEC 60947-7-x	1.02 W	Pollution severity	3
Surge voltage category	III		

Classifications

ETIM 6.0	EC000897	ETIM 7.0	EC000897
ETIM 8.0	EC000897	ETIM 9.0	EC000897
ECLASS 9.0	27-14-11-20	ECLASS 9.1	27-14-11-20
ECLASS 10.0	27-14-11-20	ECLASS 11.0	27-14-11-20
ECLASS 12.0	27-14-11-20	ECLASS 13.0	27-25-01-02

Environmental Product Compliance

REACH SVHC	/

Approvals

Approvals

UL File Number Search	UL Website
Certificate No. (cURusEX)	E184763

Downloads

Approval/Certificate/Document of Conformity	Attestation of Conformity UKCA Ex Attestation of Conformity UKCA Ex Certificate CE Declaration of Conformity UKCA declaration of conformity Confirmation of Standards EN 45545-2_2020-10
Engineering Data	CAD data – STEP
Catalogues	Catalogues in PDF-format

A2T 4 VL DL

Weidmüller Interface GmbH & Co. KG
Klingenbergstraße 26
D-32758 Detmold
Germany

www.weidmueller.com

Drawings

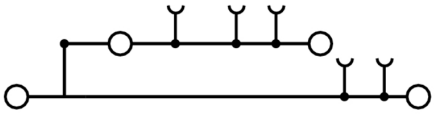

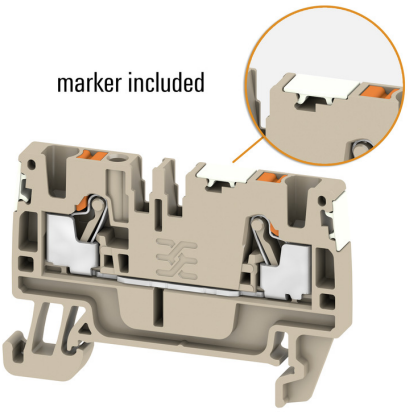

A2T 4 VL DL

Weidmüller Interface GmbH & Co. KG
Klingenbergstraße 26
D-32758 Detmold
Germany

www.weidmueller.com

Accessories

A-Series

Weidmüller's range of products includes end brackets that guarantee a permanent, reliable mounting on the terminal rail and prevent sliding. Versions with and without screws are available. The end brackets include marking options, also for group markers, and also a test plug holder.

General ordering data

Type	AEB 35 SCL/1 V0 GY	Version
Order No.	2661290000	A-series, End bracket
GTIN (EAN)	4050118702170	
Qty.	20 pc(s).	
Type	AEB 35 SCL/1 V0	Version
Order No.	2661280000	A-series, End bracket
GTIN (EAN)	4050118702163	
Qty.	20 pc(s).	
Type	AEB 35 SCL/1 V0 BK	Version
Order No.	2661300000	A-series, End bracket
GTIN (EAN)	4050118702187	
Qty.	20 pc(s).	
Type	AEB 35 SC/1	Version
Order No.	1991920000	A-series, End bracket
GTIN (EAN)	4050118376722	
Qty.	50 pc(s).	
Type	AEB 35 SC/1 BK	Version
Order No.	2475310000	A-series, End bracket
GTIN (EAN)	4050118487114	
Qty.	50 pc(s).	

4 mm²

The plug-in cross-connections feature easy handling and quick installation. This saves a great deal of time during installation in comparison with screwed solutions.

General ordering data

Type	ZQV 4N/10	Version
Order No.	1528090000	Cross-connector (terminal), Plugged, Number of poles: 10, Pitch in mm
GTIN (EAN)	4050118332896	(P): 6.10, Insulated: Yes, 32 A, orange
Qty.	20 pc(s).	

A2T 4 VL DL

Weidmüller Interface GmbH & Co. KG
Klingenbergstraße 26
D-32758 Detmold
Germany

www.weidmueller.com

Accessories

Type	ZQV 4N/2 RD	Version
Order No.	2460450000	Cross-connector (terminal), Plugged, Number of poles: 2, Pitch in mm
GTIN (EAN)	4050118476149	(P): 6.10, 32 A, red
Qty.	60 pc(s).	
Type	ZQV 4N/30	Version
Order No.	2561580000	Cross-connector (terminal), Plugged, Number of poles: 30, Pitch in mm
GTIN (EAN)	4050118570113	(P): 6.10, 32 A, orange
Qty.	5 pc(s).	
Type	ZQV 4N/3 BL	Version
Order No.	1528080000	Cross-connector (terminal), Plugged, Number of poles: 3, Pitch in mm
GTIN (EAN)	4050118333008	(P): 6.10, Insulated: Yes, 32 A, blue
Qty.	60 pc(s).	
Type	ZQV 4N/6 RD	Version
Order No.	2460780000	Cross-connector (terminal), Plugged, Number of poles: 6, Pitch in mm
GTIN (EAN)	4050118476200	(P): 6.10, Insulated: Yes, 32 A, red
Qty.	20 pc(s).	
Type	ZQV 4N/50 RD	Version
Order No.	2460730000	Cross-connector (terminal), Plugged, Number of poles: 50, Pitch in mm
GTIN (EAN)	4050118476156	(P): 6.10, Insulated: Yes, 32 A, red
Qty.	5 pc(s).	
Type	ZQV 4N/30 BL	Version
Order No.	2561610000	Cross-connector (terminal), Plugged, Number of poles: 30, Pitch in mm
GTIN (EAN)	4050118569971	(P): 6.10, 32 A, blue
Qty.	5 pc(s).	
Type	ZQV 4N/6 BL	Version
Order No.	1528170000	Cross-connector (terminal), Plugged, Number of poles: 6, Pitch in mm
GTIN (EAN)	4050118332926	(P): 6.10, Insulated: Yes, 32 A, blue
Qty.	20 pc(s).	
Type	ZQV 4N/7 BL	Version
Order No.	1528180000	Cross-connector (terminal), Plugged, Number of poles: 7, Pitch in mm
GTIN (EAN)	4050118333114	(P): 6.10, Insulated: Yes, 32 A, blue
Qty.	20 pc(s).	
Type	ZQV 4N/5 RD	Version
Order No.	2460790000	Cross-connector (terminal), Plugged, Number of poles: 5, Pitch in mm
GTIN (EAN)	4050118476217	(P): 6.10, Insulated: Yes, 32 A, red
Qty.	60 pc(s).	
Type	ZQV 4N/9 RD	Version
Order No.	2460750000	Cross-connector (terminal), Plugged, Number of poles: 9, Pitch in mm
GTIN (EAN)	4050118476170	(P): 6.10, Insulated: Yes, 32 A, red
Qty.	20 pc(s).	
Type	ZQV 4N/5 BL	Version
Order No.	1528140000	Cross-connector (terminal), Plugged, Number of poles: 5, Pitch in mm
GTIN (EAN)	4050118333015	(P): 6.10, Insulated: Yes, 32 A, blue
Qty.	60 pc(s).	
Type	ZQV 4N/6	Version
Order No.	1527990000	Cross-connector (terminal), Plugged, Number of poles: 6, Pitch in mm
GTIN (EAN)	4050118332919	(P): 6.10, Insulated: Yes, 32 A, orange
Qty.	20 pc(s).	
Type	ZQV 4N/30 RD	Version
Order No.	2561600000	Cross-connector (terminal), Plugged, Number of poles: 30, Pitch in mm
GTIN (EAN)	4050118569964	(P): 6.10, 32 A, red
Qty.	5 pc(s).	

A2T 4 VL DL

Weidmüller Interface GmbH & Co. KG
Klingenbergstraße 26
D-32758 Detmold
Germany

www.weidmueller.com

Accessories

Type	ZQV 4N/8	Version
Order No.	1528030000	Cross-connector (terminal), Plugged, Number of poles: 8, Pitch in mm
GTIN (EAN)	4050118332841	(P): 6.10, Insulated: Yes, 32 A, orange
Qty.	20 pc(s).	
Type	ZQV 4N/2 BL	Version
Order No.	1528040000	Cross-connector (terminal), Plugged, Number of poles: 2, Pitch in mm
GTIN (EAN)	4050118332773	(P): 6.10, Insulated: Yes, 32 A, blue
Qty.	60 pc(s).	
Type	ZQV 4N/50 BL	Version
Order No.	1528240000	Cross-connector (terminal), Plugged, Number of poles: 50, Pitch in mm
GTIN (EAN)	4050118333121	(P): 6.10, Insulated: Yes, 32 A, blue
Qty.	5 pc(s).	
Type	ZQV 4N/3	Version
Order No.	1527940000	Cross-connector (terminal), Plugged, Number of poles: 3, Pitch in mm
GTIN (EAN)	4050118332865	(P): 6.10, Insulated: Yes, 32 A, orange
Qty.	60 pc(s).	
Type	ZQV 4N/9	Version
Order No.	1528070000	Cross-connector (terminal), Plugged, Number of poles: 9, Pitch in mm
GTIN (EAN)	4050118332797	(P): 6.10, Insulated: Yes, 32 A, orange
Qty.	20 pc(s).	
Type	ZQV 4N/3 RD	Version
Order No.	2460810000	Cross-connector (terminal), Plugged, Number of poles: 3, Pitch in mm
GTIN (EAN)	4050118476231	(P): 6.10, 32 A, red
Qty.	60 pc(s).	
Type	ZQV 4N/4 BL	Version
Order No.	1528120000	Cross-connector (terminal), Plugged, Number of poles: 4, Pitch in mm
GTIN (EAN)	4050118332872	(P): 6.10, Insulated: Yes, 32 A, blue
Qty.	60 pc(s).	
Type	ZQV 4N/8 RD	Version
Order No.	2460760000	Cross-connector (terminal), Plugged, Number of poles: 8, Pitch in mm
GTIN (EAN)	4050118476187	(P): 6.10, Insulated: Yes, 32 A, red
Qty.	20 pc(s).	
Type	ZQV 4N/10 RD	Version
Order No.	2460740000	Cross-connector (terminal), Plugged, Number of poles: 10, Pitch in mm
GTIN (EAN)	4050118476163	(P): 6.10, 32 A, red
Qty.	20 pc(s).	
Type	ZQV 4N/7 RD	Version
Order No.	2460770000	Cross-connector (terminal), Plugged, Number of poles: 7, Pitch in mm
GTIN (EAN)	4050118476194	(P): 6.10, Insulated: Yes, 32 A, red
Qty.	20 pc(s).	
Type	ZQV 4N/50	Version
Order No.	1528130000	Cross-connector (terminal), Plugged, Number of poles: 50, Pitch in mm
GTIN (EAN)	4050118332902	(P): 6.10, Insulated: Yes, 32 A, orange
Qty.	5 pc(s).	
Type	ZQV 4N/9 BL	Version
Order No.	1528220000	Cross-connector (terminal), Plugged, Number of poles: 9, Pitch in mm
GTIN (EAN)	4050118333107	(P): 6.10, Insulated: Yes, 32 A, blue
Qty.	20 pc(s).	
Type	ZQV 4N/10 BL	Version
Order No.	1528230000	Cross-connector (terminal), Plugged, Number of poles: 10, Pitch in mm
GTIN (EAN)	4050118333138	(P): 6.10, Insulated: Yes, 32 A, blue
Qty.	20 pc(s).	

A2T 4 VL DL

Weidmüller Interface GmbH & Co. KG
Klingenbergstraße 26
D-32758 Detmold
Germany

www.weidmueller.com

Accessories

Type	ZQV 4N/7	Version
Order No.	1528020000	Cross-connector (terminal), Plugged, Number of poles: 7, Pitch in mm
GTIN (EAN)	4050118332780	(P): 6.10, Insulated: Yes, 32 A, orange
Qty.	20 pc(s).	
Type	ZQV 4N/2	Version
Order No.	1527930000	Cross-connector (terminal), Plugged, Number of poles: 2, Pitch in mm
GTIN (EAN)	4050118332766	(P): 6.10, Insulated: Yes, 32 A, orange
Qty.	60 pc(s).	
Type	ZQV 4N/32	Version
Order No.	2561670000	Cross-connector (terminal), Plugged, Number of poles: 32, Pitch in mm
GTIN (EAN)	4050118570175	(P): 6.00, Insulated: Yes, 32 A, orange
Qty.	5 pc(s).	
Type	ZQV 4N/5	Version
Order No.	1527980000	Cross-connector (terminal), Plugged, Number of poles: 5, Pitch in mm
GTIN (EAN)	4050118332759	(P): 6.10, Insulated: Yes, 32 A, orange
Qty.	60 pc(s).	
Type	ZQV 4N/8 BL	Version
Order No.	1528190000	Cross-connector (terminal), Plugged, Number of poles: 8, Pitch in mm
GTIN (EAN)	4050118332858	(P): 6.10, Insulated: Yes, 32 A, blue
Qty.	20 pc(s).	
Type	ZQV 4N/4	Version
Order No.	1527970000	Cross-connector (terminal), Plugged, Number of poles: 4, Pitch in mm
GTIN (EAN)	4050118332889	(P): 6.10, Insulated: Yes, 32 A, orange
Qty.	60 pc(s).	
Type	ZQV 4N/4 RD	Version
Order No.	2460800000	Cross-connector (terminal), Plugged, Number of poles: 4, Pitch in mm
GTIN (EAN)	4050118476224	(P): 6.10, Insulated: Yes, 32 A, red
Qty.	60 pc(s).	

A2T 4 VL DL

Weidmüller Interface GmbH & Co. KG
Klingenbergstraße 26
D-32758 Detmold
Germany

www.weidmueller.com

Accessories

DEK 5/6

WS/ DEK
MultiMark terminal markers use an innovative composite material made from two components. The hard base contour of the marker snaps securely into the connector. The elastic surface finish makes the marker easy to mount. This specially punched material enables the strips to be stretched to accommodate the slight variations in spacing that tend to add up, especially with long terminal blocks. Another advantage: the excellent printability of the surface material guarantees durable and wear-resistant labelling. A print resolution of 300 dpi also produces a very legible script.
Your benefits with MultiMark

- Firm hold and durable printing
- Continuous strips save installation time
- Easy mounting thanks to an innovative composite material
- Large label field for optimal legibility
- High flexibility thanks to manufacturer independence

General ordering data

Type	DEK 5/6 MM WS	Version
Order No.	2007120000	Dekafix, Terminal marker, 5 x 6 mm, Weidmueller, white
GTIN (EAN)	4050118392104	
Qty.	600 pc(s).	

Slotted screwdriver

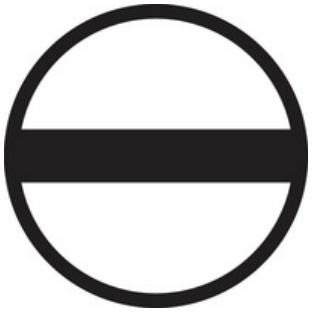

VDE insulated screwdriver sets, for working on live parts up to 1000 V AC and 1500 V DC, DIN EN 60900. IEC 900. Each piece is "GS" safety tested. Blade made from fully hardened, high-alloy chromium-vanadium-molybdenum steel, gun-metal finish.

General ordering data

Type	SDIS SLIM 0.6X3.5X100	Version
Order No.	2749610000	Mounting tool, Blade width (B): 3.5 mm, Blade length: 100 mm, Blade
GTIN (EAN)	4050118896350	thickness (A): 0.6 mm
Qty.	1 pc(s).	

A2T 4 VL DL

Weidmüller Interface GmbH & Co. KG
Klingenbergstraße 26
D-32758 Detmold
Germany

www.weidmueller.com

Accessories

A-Series

Warning covers with a flash symbol provide more safety for man and machine. They are used where external voltage must be indicated within the application.

General ordering data

Type	AAM 4 YE FLASH	Version
Order No.	2635560000	Terminal marker, 10 x 6.1 mm, Pitch in mm (P): 6.00 yellow
GTIN (EAN)	4050118674507	
Qty.	40 pc(s).	

SnapMark

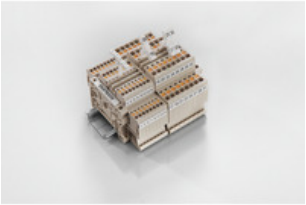

SnapMark - this tag carrier has been developed especifically for the I-series double-level terminal IDK 1.5N. The flexible pivot mechanism allows cross-connections to be easily installed or removed. It can hold four DEK 5 labelling tags or two WS 10/5 Middle connector markers.

General ordering data

Type	SNAPMARK I	Version
Order No.	1805880000	Group markers, Terminal marker, 23 x 5 mm, Pitch in mm (P): 5.00
GTIN (EAN)	4032248273614	Weidmueller, white
Qty.	50 pc(s).	

A2T 4 VL DL

Weidmüller Interface GmbH & Co. KG
Klingenbergstraße 26
D-32758 Detmold
Germany

www.weidmueller.com

Accessories

A-Series

Test adapters and test plugs are used for the electrical connection between terminal blocks and the test equipment. In this way, an electrical contact can be established in the wired state and measurements can be done easily.

General ordering data

Type	ATPG 4 MI-R	Version
Order No.	1991860000	Test adapter (terminal), 1.5 mm², 250 V, 0.2 A
GTIN (EAN)	4050118376661	
Qty.	50 pc(s).	
Type	ATPG 1.5-10 L	Version
Order No.	1991890000	Test adapter (terminal), 1.5 mm², 250 V, 0.2 A
GTIN (EAN)	4050118376647	
Qty.	50 pc(s).	

Marker holder

The marker holder offer the possibility of additional mounting of standard markers with a pitch of 5 or 5.1 mm. The angled holders can be optionally snaped together and could be mounted in all standard marking channels of the Klippon® Connect modular terminal blocks. Fitting marker types could be found under the respective accessories of the designation marking holder.

General ordering data

Type	BZT 1 ZA WS 10/5	Version
Order No.	1805520000	Accessories, Marker holder
GTIN (EAN)	4032248270248	
Qty.	100 pc(s).	
Type	BZT 1 WS 10/5	Version
Order No.	1805490000	Accessories, Marker holder
GTIN (EAN)	4032248270231	
Qty.	100 pc(s).	

A2T 4 VL DL

Weidmüller Interface GmbH & Co. KG
Klingenbergstraße 26
D-32758 Detmold
Germany

www.weidmueller.com

Accessories

4 mm²

End plates are fitted to the open side of the last modular terminal before the end bracket. The use of an end plate ensures the function of the modular terminal and the specified rated voltage. It guarantees protection against contact with live parts and makes the final terminal finger-proof.

General ordering data

Type	AEP 2T 4 BL	Version
Order No.	2540010000	A-series, End plate
GTIN (EAN)	4050118551907	
Qty.	20 pc(s).	

Type	AEP 2T 4	Version
Order No.	2540000000	A-series, End plate
GTIN (EAN)	4050118551839	
Qty.	20 pc(s).	